DS-2CE76D0T-EXIPF
2MP Indoor EXIR Fixed Turret Camera

DIGITAL WDR

Key Feature

- High quality imaging with 2 MP, 1920 × 1080 resolution
- 2.8 mm, 3.6 mm fixed lens
- Up to 20 m IR distance for bright night imaging
- One port for four switchable signals (TVI/AHD/CVI/CVBS)

▪ Specification

Camera	
Image Sensor	2 MP CMOS
Signal System	PAL/NTSC
Resolution	1920 (H) × 1080 (V)
Frame Rate	TVI: 1080p@25fps/30fps AHD: 1080p@25fps/30fps CVI: 1080p@25fps/30fps CVBS: PAL/NTSC
Min. Illumination	0.02 Lux @ (F1.2, AGC ON), 0 Lux with IR
Shutter Time	PAL: 1/25 s to 1/50,000 s; NTSC: 1/30 s to 1/50,000 s
Lens	2.8 mm, 3.6 mm Fixed Lens
Field of View	2.8 mm, horizontal FOV: 102°, vertical FOV: 55°, diagonal FOV: 123° 3.6 mm, horizontal FOV: 81°, vertical FOV: 42°, diagonal FOV: 100°
Lens Mount	M12
Day & Night	ICR
WDR (Wide Dynamic Range)	Digital WDR
Angle Adjustment	Pan: 0° to 360°, Tilt: 0° to 75°, Rotation: 0° to 360°
Menu	
Image Mode	STD/HIGH-SAT
AGC	Yes
Day/Night Mode	Auto/Color/BW (Black and White)
White Balance	Auto
AE (Auto Exposure) Mode	DWDR, BLC, Global
Noise Reduction	2D DNR
Language	English
Function	Brightness, Mirror, Smart IR, Sharpness
Interface	
Video Output	Switchable TVI/AHD/CVI/CVBS
General	
Operating Conditions	-40°C to 60°C (-40°F to 140°F), Humidity: 90% or less (non-condensing)
Power Supply	12 VDC ± 25%
Consumption	Max. 3.3 W
Material	Plastic
IR Range	Up to 20 m
Communication	HIKVISION-C
Dimension	Φ 84.6 mm × 78.9 mm (Φ 3.33" × 3.11")
Weight	Approx. 195g (0.43 lb.)

▪ Dimension

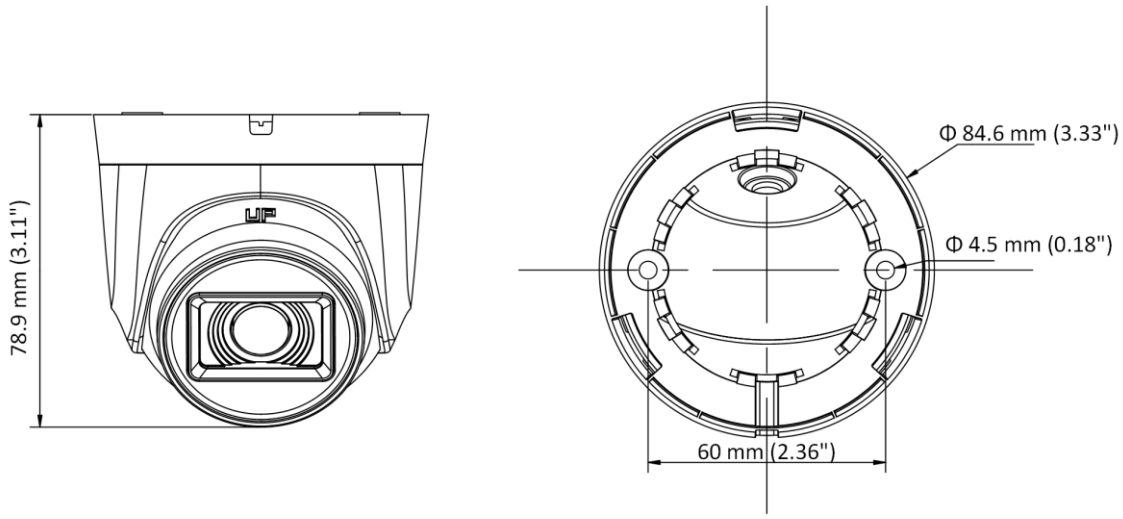

▪ Accessory

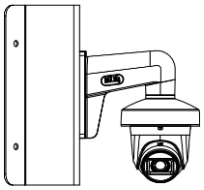

DS-1276ZJ-SUS

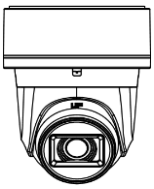

DS-1280ZJ-XS

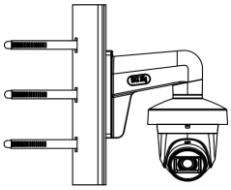

DS-1275ZJ-SUS

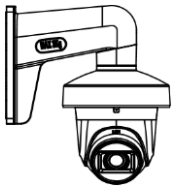

DS-1272ZJ-110-TRS

▪ Available Model

DS-2CE76D0T-EXIPF

Distributed by

Headquarters
No.555 Qianmo Road, Binjiang District,
Hangzhou 310051, China
T +86-571-8807-5998
overseasbusiness@hikvision.com

Hikvision USA
T +1-909-895-0400
sales.usa@hikvision.com

Hikvision Europe
T +31-23-5542770
sales.eu@hikvision.com

Hikvision UK & Ireland
T +01628-902140
sales.uk@hikvision.com

Hikvision UAE
T +971-4-4432090
salesme@hikvision.com

Hikvision Russia
T +7-495-669-67-99
saleru@hikvision.com

Hikvision Australia
T +61-2-8599-4233
salesau@hikvision.com

Hikvision Italy
T +39-0438-6902
info.it@hikvision.com

Hikvision South Africa
Tel: +27 (10) 0351172
sale.africa@hikvision.com

Hikvision Singapore
T +65-6684-4718
sg@hikvision.com

Hikvision Korea
T +82-(0)31-731-8817
sales.korea@hikvision.com

Hikvision India
T +91-22-28469900
sales@pramahikvision.com

Hikvision Brazil
T +55 11 3318-0050
Latam.support@hikvision.com

Hikvision France
T +33(0)1-85-330-450
info.fr@hikvision.com

Hikvision Spain
T +34-91-737-16-55
info.es@hikvision.com

Hikvision Poland
T +48-22-460-01-50
info.pl@hikvision.com

Hikvision Canada
T +1-866-200-6690
sales.canada@hikvision.com

Hikvision Turkey
T +90 (216)521 7070- 7074
sales.tr@hikvision.com

Hikvision Kazakhstan
T +7-727-9730667
nikia.panfilov@hikvision.ru

Hikvision Tashkent
T +99-87-1238-9438
uzb@hikvision.ru

Hikvision Indonesia
T +62-21-2933759
Sales.Indonesia@hikvision.com

Hikvision Thailand
T +662-275-9949
sales.thailand@hikvision.com

Hikvision Malaysia
T +601-7652-2413
sales.my@hikvision.com

Hikvision Vietnam
T +84-974270888
sales.vt@hikvision.com

Hikvision Hong Kong
T +852-2151-1761
info.hk@hikvision.com

Hikvision Colombia
sales.colombia@hikvision.com

© Hikvision Digital Technology Co., Ltd. 2019 | Data subject to change without notice |