Product Datasheet
Product ID: SH90WB

90° Symmetrical Horn WB

HORN ANTENNA WITH WIDEBAND PERFORMANCE

90° Symmetrical Horn Antennas have a symmetrical beam pattern with depressed sidelobes. They offer excellent noise rejection and supreme scalability options. They are perfect for high-density AP clusters and dense co-location deployments.

Important Features
- **Wideband performance covering 5 & 6 GHz unlicensed spectrum bands**
- **Industry-changing TwistPort™ waveguide connector. Connect directly to waveguide ported radios or use TP Adaptor to common coaxial connectors.**

New Industrial design
- **Built of high grade aluminum for extreme outdoor resistance including harsh salt water environments**
- **Extremely lightweigth for low tower load**
- **Compact for low wind loading**
- **UBR mounting bracket with stainless steel hardware with anti-seize coating**
- **Industry leading ergonomics with integrated handle for easy deployment**

TECHNICAL DATA

Radio Connection	TwistPort™ Waveguide Connector
Antenna Type	Horn
Materials	UV Resistant ABS plastic, Aluminium, Stainless Steel
Enviromental	IP65
Pole Mounting Diameter	40-80 mm (1.5-3.1 inch) Recommended as close to 80 mm (3.1 inch) as possible
Temperature	-35°C to +60°C (-31°F to +140°F)
Wind Survival	160 km/h (100 mi/h)
Wind Load	24/8 N - Front/Side at 160 km/h (100 mi/h)
Effective Projected Area	212/81 cm^2 - Front/Side (32.8/12.5 in^2)
Mechanical Adjustment	± 20° Elevation, ± 20° Azimuth
Weight	1.7 kg / 3.7 lbs – single unit ** 2.5 kg / 5.5 lbs – single unit incl. package ** 19.7 kg / 43.4 lbs – wholesale box (5 units) **
Dimensions	Single unit retail box: 290 × 236 × 258 mm (11.4 x 9.3 x 10.1 inch) ** Wholesale box (5 units): 1000 × 392 × 274 mm (39.3 x 15.4 x 10.8 inch) **

PERFORMANCE

Frequency Range	4900 - 7125 MHz Antenna on WG Port Check our online SpecCheck for performance data of the particular combination of feed (TPA) and antenna
Gain	10 dBi
Azimuth Beam Width -3 dB/-6dB	H 71°, V 71° / H 90°, V 90°
Elevation Beam Width -3 dB/-6dB	H 71°, V 71° / H 90°, V 90°
Beam Efficiency	99 %*
Front-to-Back Ratio	28 dB
VSWR	Check our online SpecCheck for performance data of the particular combination of feed (TPA) and antenna
Polarization	Dual Linear H + V
Impedance	50 Ohm

PRODUCT DIMENSIONS

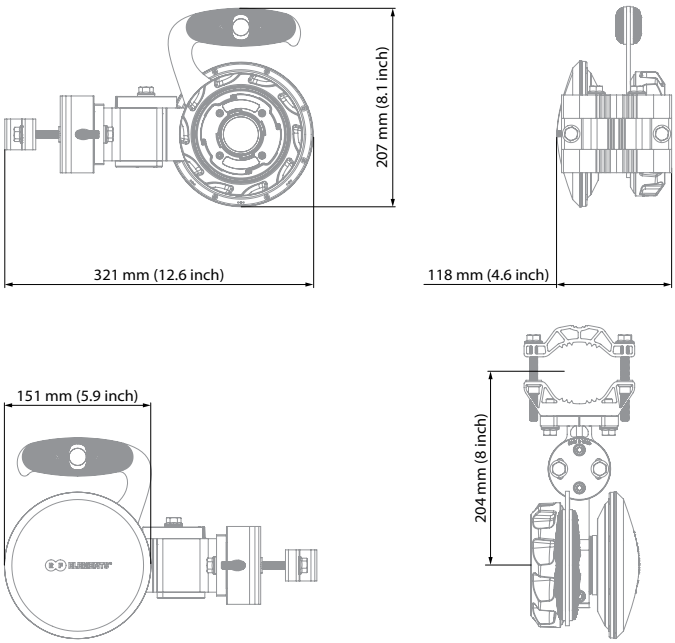

* Beam efficiency defined up to first null ** Subject to change

RF elements® and TwistPort™ are trademarks of RF elements s.r.o., Slovakia.
All rights of respective trademark owners reserved. © RF elements 2024

This product was produced under the conditions of a certified management system that meets the requirements of the ISO 9001, ISO 14001 and ISO 45001 standard, while this system was certified by QSCert.

www.rfelements.com

ANTENNA GAIN

Antenna Nominal Gain with Waveguide Port

This graph demonstrates the maximum achievable gain of the antenna in boresight with an ideal waveguide port. As we offer various feeding options, we recommend you to check our SpecCheck for detailed performance graphs and specs of the antennas and feeds of your choice.

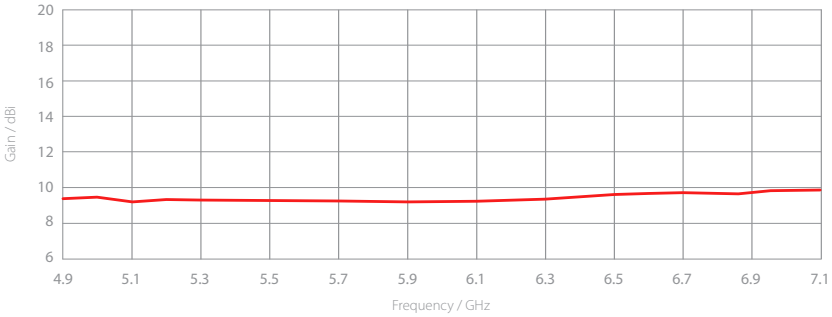

ANTENNA BEAMWIDTH

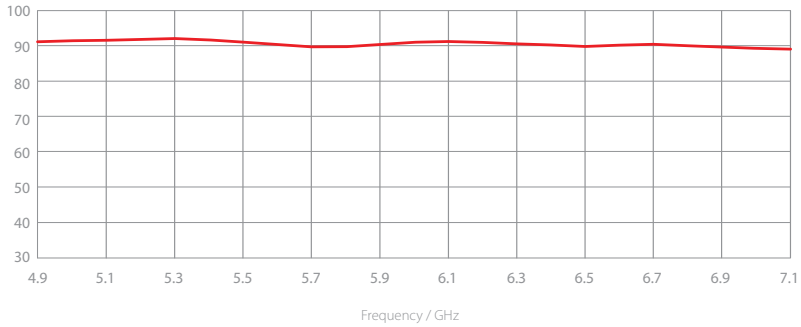

AZIMUTH PATTERN

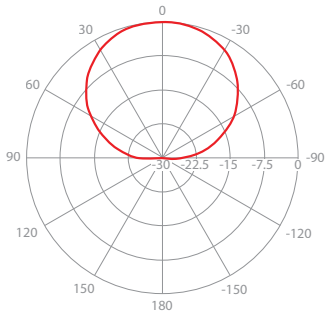

H/V - Port Pattern Azimuth 6.5 GHz

ELEVATION PATTERN

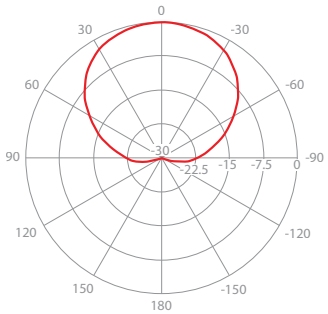

H/V - Port Pattern Elevation 6.5 GHz

This product was produced under the conditions of a certified management system that meets the requirements of the ISO 9001, ISO 14001 and ISO 45001 standard, while this system was certified by QSCert.

RF elements® and TwistPort™ are trademarks of RF elements s.r.o., Slovakia.
All rights of respective trademark owners reserved. © RF elements 2024