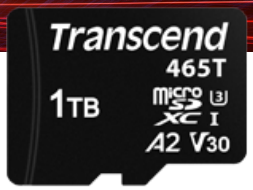

microSD Cards

USD465T & USD465I

Utilizing top-quality 162-layer 3D NAND flash and rated to endure 3K P/E cycles, Transcend's USD465T memory cards combine the advantages of high performance and exceptional endurance at an affordable price. They are ideal for write-intensive applications such as medical devices, surveillance systems, and POS terminals.

Transcend also offers the USD465I with wide temperature (-40℃ ~ 85℃) capabilities to ensure sustained functionality and optimal reliability.

Hardware Features

- Compliant with RoHS 2.0 standards
- Compliant with SD specification 6.1
- Compliant with UHS-I
- Compliant with Video Speed Class 30 (V30)
- Compliant with Application Performance Class 2 (A2)

Firmware Features

- Built-in LDPC ECC (Error Correction Code) functionality
- Early Move
- Supports S.M.A.R.T. function to conduct health monitoring, analysis, and reporting for storage devices
- Wear-Leveling
- Supports password protection and secure erase via Scope Pro

*Scope Pro is available on Windows OS only when the RDF5 is used with the SD/microSD cards.

Ordering Information

256GB	TS256GUSD465T TS256GUSD465I
512GB	TS512GUSD465T TS512GUSD465I
1TB	TS1TUSD465I TS1TUSD465T

Specifications

Appearance	Dimensions	11 mm x 15 mm x 1 mm (0.43" x 0.59" x 0.04")
	Form Factor	microSD flash card
Storage	Flash Type	162-layer 3D NAND flash
	Capacity	256 GB / 512 GB / 1 TB
Operating Environment	Operating Voltage	2.7V ~ 3.6V
	Drop Test	1.5m free fall
	Operating Temperature	Standard Temp. -25°C (-13°F) ~ 85°C (185°F) Wide Temp. -40°C (-40°F) ~ 85°C (185°F)
	Storage Temperature	-40°C (-40°F) ~ 85°C (185°F)
	Humidity	0% ~ 95%
	Shock	Acceleration: 490 m/s² (standard holding time: 11 ms, semi-sine wave, velocity change: 3.44 m/s)
	Vibration (Operating)	20 G (peak-to-peak), 20 Hz ~ 2,000 Hz (frequency)
Performance	Read Speed (Max.)	Up to 100 MB/s
	Write Speed (Max.)	Up to 80 MB/s
	Terabytes Written (TBW)	Up to 2,660 TBW
Warranty	Certificate	CE / UKCA / FCC
	Warranty	Three-year Limited Warranty

Mechanical Dimensions

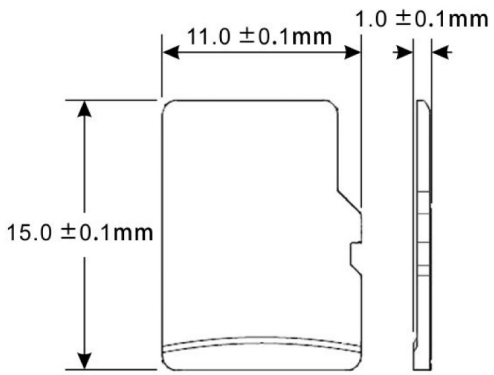

Product specifications are subject to change without notice. Pictures shown may differ from actual products. Total accessible capacity varies depending on operating environment. Due to the complexity and variety of industrial applications, Transcend cannot guarantee 100% compatibility with all platforms and under all scenarios. For special applications and environments, it is strongly suggested that you contact Transcend beforehand for clarification.